Cambridge International AS & A Level

Cambridge International Examinations
Cambridge International Advanced Subsidiary and Advanced Level

CANDIDATE NAME									
CENTRE NUMBER						CANDIDATE NUMBER			

5643781577

PHYSICS **9702/22**

Paper 2 AS Level Structured Questions **May/June 2017**

1 hour 15 minutes

Candidates answer on the Question Paper.

No Additional Materials are required.

READ THESE INSTRUCTIONS FIRST

Write your Centre number, candidate number and name on all the work you hand in.
Write in dark blue or black pen.
You may use an HB pencil for any diagrams or graphs.
Do not use staples, paper clips, glue or correction fluid.
DO **NOT** WRITE IN ANY BARCODES.

Answer **all** questions.

Electronic calculators may be used.
You may lose marks if you do not show your working or if you do not use appropriate units.

At the end of the examination, fasten all your work securely together.
The number of marks is given in brackets [ ] at the end of each question or part question.

DC (NH/FD) 127433/3
© UCLES 2017

CAMBRIDGE International Examinations

[Turn over

Data

speed of light in free space	$c = 3.00 \times 10^{8}\,\text{m s}^{-1}$
permeability of free space	$\mu_0 = 4\pi \times 10^{-7}\,\text{H m}^{-1}$
permittivity of free space	$\varepsilon_0 = 8.85 \times 10^{-12}\,\text{F m}^{-1}$
	$(\frac{1}{4\pi\varepsilon_0} = 8.99 \times 10^{9}\,\text{m F}^{-1})$
elementary charge	$e = 1.60 \times 10^{-19}\,\text{C}$
the Planck constant	$h = 6.63 \times 10^{-34}\,\text{J s}$
unified atomic mass unit	$1\,\text{u} = 1.66 \times 10^{-27}\,\text{kg}$
rest mass of electron	$m_e = 9.11 \times 10^{-31}\,\text{kg}$
rest mass of proton	$m_p = 1.67 \times 10^{-27}\,\text{kg}$
molar gas constant	$R = 8.31\,\text{J K}^{-1}\,\text{mol}^{-1}$
the Avogadro constant	$N_A = 6.02 \times 10^{23}\,\text{mol}^{-1}$
the Boltzmann constant	$k = 1.38 \times 10^{-23}\,\text{J K}^{-1}$
gravitational constant	$G = 6.67 \times 10^{-11}\,\text{N m}^2\,\text{kg}^{-2}$
acceleration of free fall	$g = 9.81\,\text{m s}^{-2}$

© UCLES 2017

Formulae

uniformly accelerated motion	$s = ut + \frac{1}{2}at^2$ $v^2 = u^2 + 2as$
work done on/by a gas	$W = p\Delta V$
gravitational potential	$\phi = -\frac{Gm}{r}$
hydrostatic pressure	$p = \rho gh$
pressure of an ideal gas	$p = \frac{1}{3}\frac{Nm}{V}\langle c^2 \rangle$
simple harmonic motion	$a = -\omega^2 x$
velocity of particle in s.h.m.	$v = v_0 \cos \omega t$ $v = \pm \omega \sqrt{(x_0^2 - x^2)}$
Doppler effect	$f_o = \frac{f_s v}{v \pm v_s}$
electric potential	$V = \frac{Q}{4\pi\varepsilon_0 r}$
capacitors in series	$1/C = 1/C_1 + 1/C_2 + \ldots$
capacitors in parallel	$C = C_1 + C_2 + \ldots$
energy of charged capacitor	$W = \frac{1}{2}QV$
electric current	$I = Anvq$
resistors in series	$R = R_1 + R_2 + \ldots$
resistors in parallel	$1/R = 1/R_1 + 1/R_2 + \ldots$
Hall voltage	$V_H = \frac{BI}{ntq}$
alternating current/voltage	$x = x_0 \sin \omega t$
radioactive decay	$x = x_0 \exp(-\lambda t)$
decay constant	$\lambda = \frac{0.693}{t_{\frac{1}{2}}}$

© UCLES 2017

[Turn over

Answer **all** the questions in the spaces provided.

1 **(a)** State two SI base units other than kilogram, metre and second.

1. .....

2. .....
[1]

(b) Determine the SI base units of resistivity.

base units .....[3]

(c) (i) A wire of cross-sectional area 1.5 mm^2 and length 2.5 m has a resistance of 0.030 Ω. Calculate the resistivity of the material of the wire in nΩ m.

resistivity = ...nΩ m [3]

(ii) 1. State what is meant by *precision*.

.....

.....

2. Explain why the precision in the value of the resistivity is improved by using a micrometer screw gauge rather than a metre rule to measure the diameter of the wire.

.....

.....

.....

[2]

[Total: 9]

© UCLES 2017

[Turn over

2 **(a)** Define *velocity*.

.....

.....[1]

(b) A ball of mass 0.45 kg leaves the edge of a table with a horizontal velocity v, as shown in Fig. 2.1.

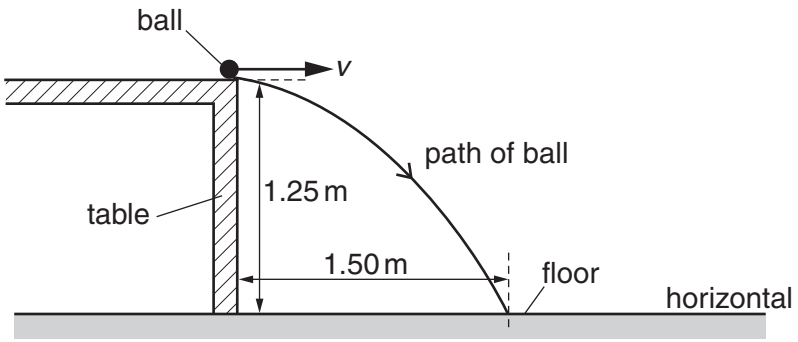

Fig. 2.1

The height of the table is 1.25 m. The ball travels a distance of 1.50 m horizontally before hitting the floor.

Air resistance is negligible.

Calculate, for the ball,

(i) the horizontal velocity v as it leaves the table,

v = ...m s^{-1} [3]

© UCLES 2017

(ii) the velocity just as it hits the floor,

magnitude of velocity = ...$m\,s^{-1}$

angle to the horizontal = ... °
[4]

(iii) the kinetic energy just as it hits the floor,

kinetic energy = ...J [2]

(iv) the loss in gravitational potential energy as it falls from the table to the floor.

loss in potential energy = ...J [2]

(c) Explain why the kinetic energy of the ball in **(b)(iii)** does not equal the loss of gravitational potential energy in **(b)(iv)**.

.....

.....[1]

[Total: 13]

© UCLES 2017

3 The Young modulus of the material of a wire can be determined using the apparatus shown in Fig. 3.1.

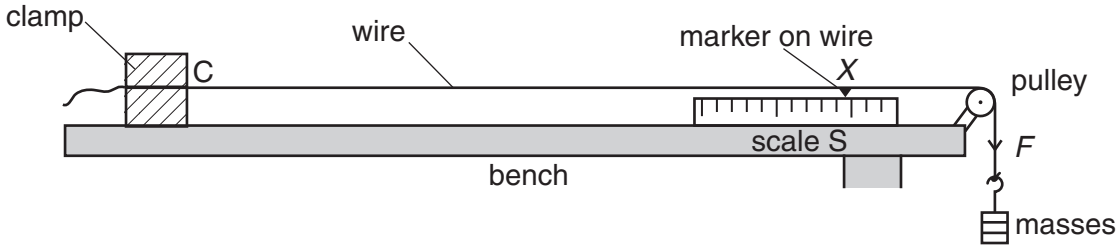

Fig. 3.1

One end of the wire is clamped at C and a marker is attached to the wire above a scale S. A force to extend the wire is applied by attaching masses to the other end of the wire.

The reading X of the marker on the scale S is determined for different forces F applied to the end of the wire. The variation with X of F is shown in Fig. 3.2.

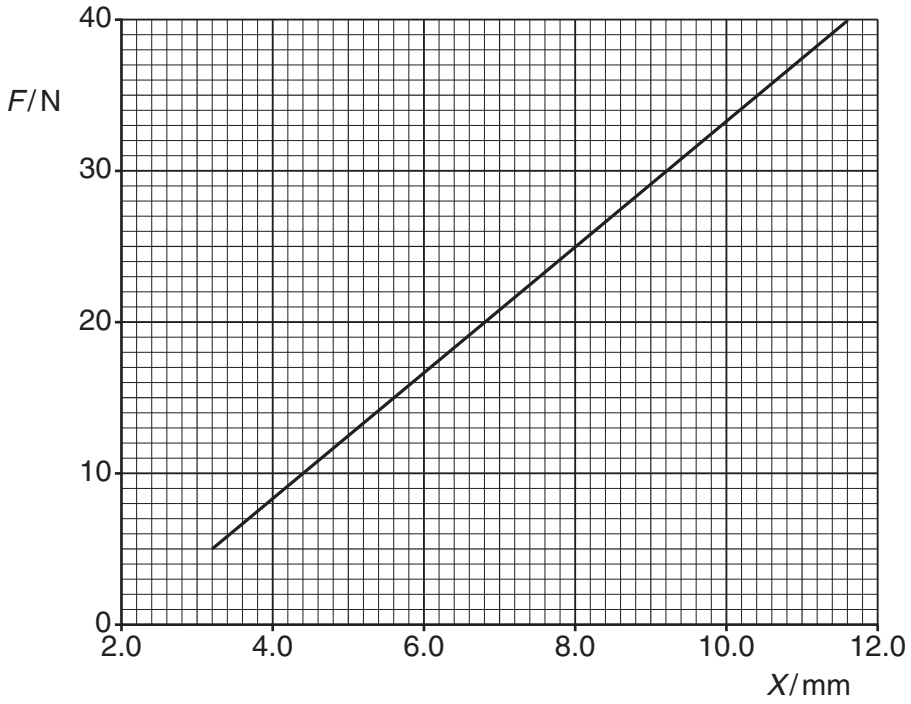

Fig. 3.2

© UCLES 2017

(a) The length of the wire from C to the marker for $F = 0$ is 3.50 m. The diameter of the wire is 0.38 mm.

Use the gradient of the line in Fig. 3.2 to determine the Young modulus E of the material of the wire in TPa.

$E =$ ..... TPa [3]

(b) The experiment is repeated with a thicker wire of the same material and length.

State how the range of the force F must be changed to obtain the same range of scale readings as in Fig. 3.2.

.....

.....

.....[1]

[Total: 4]

© UCLES 2017

4 **(a)** State Newton's first law of motion.

.....

.....[1]

(b) An object A of mass 100 g is moving in a straight line with a velocity of 0.60 m s^{-1} to the right. An object B of mass 200 g is moving in the same straight line as object A with a velocity of 0.80 m s^{-1} to the left, as shown in Fig. 4.1.



Fig. 4.1

Objects A and B collide. Object A then moves with a velocity of 0.40 m s^{-1} to the left.

(i) Calculate the magnitude of the velocity of B after the collision.

magnitude of velocity = ...m s^{-1} [2]

(ii) The collision between A and B is inelastic.

Explain how the collision is inelastic and still obeys the law of conservation of energy.

.....

.....

.....[1]

[Total: 4]

5 **(a)** Define the *frequency* of a sound wave.

.....

.....[1]

(b) A sound wave travels through air. Describe the motion of the air particles relative to the direction of travel of the sound wave.

.....

.....[1]

© UCLES 2017

(c) The sound wave emitted from the horn of a stationary car is detected with a microphone and displayed on a cathode-ray oscilloscope (c.r.o.), as shown in Fig. 5.1.

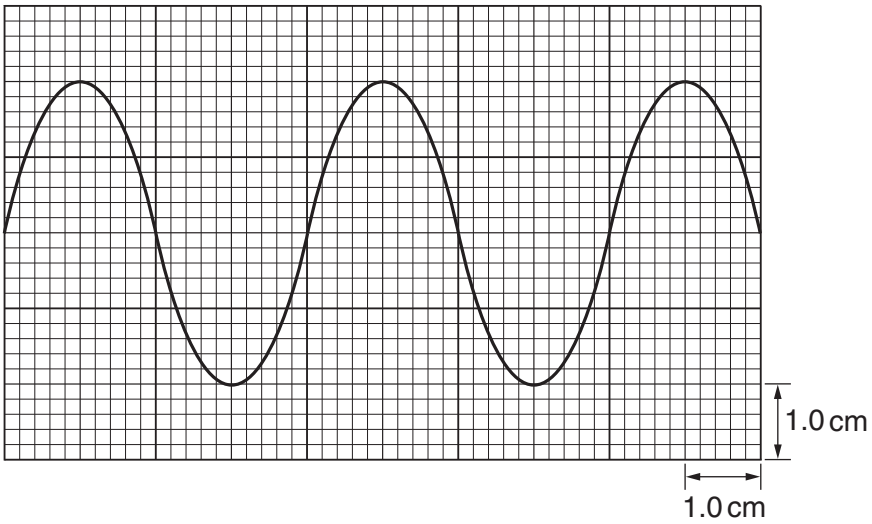

Fig. 5.1

The *y*-axis setting is 5.0 mV cm^{-1}.
The time-base setting is 0.50 ms cm^{-1}.

(i) Use Fig. 5.1 to determine the frequency of the sound wave.

frequency = ... Hz [2]

(ii) The horn of the car sounds continuously. Describe the changes to the trace seen on the c.r.o. as the car travels at constant speed

1. directly towards the stationary microphone,

.....

.....

2. directly away from the stationary microphone.

.....

.....

[3]

[Total: 7]

6 **(a)** Interference fringes may be observed using a light-emitting laser to illuminate a double slit. The double slit acts as two sources of light.

Explain

(i) the part played by diffraction in the production of the fringes,

.....

.....

.....[2]

(ii) the reason why a double slit is used rather than two separate sources of light.

.....

.....

.....[1]

© UCLES 2017

(b) A laser emitting light of a single wavelength is used to illuminate slits S_1 and S_2, as shown in Fig. 6.1.

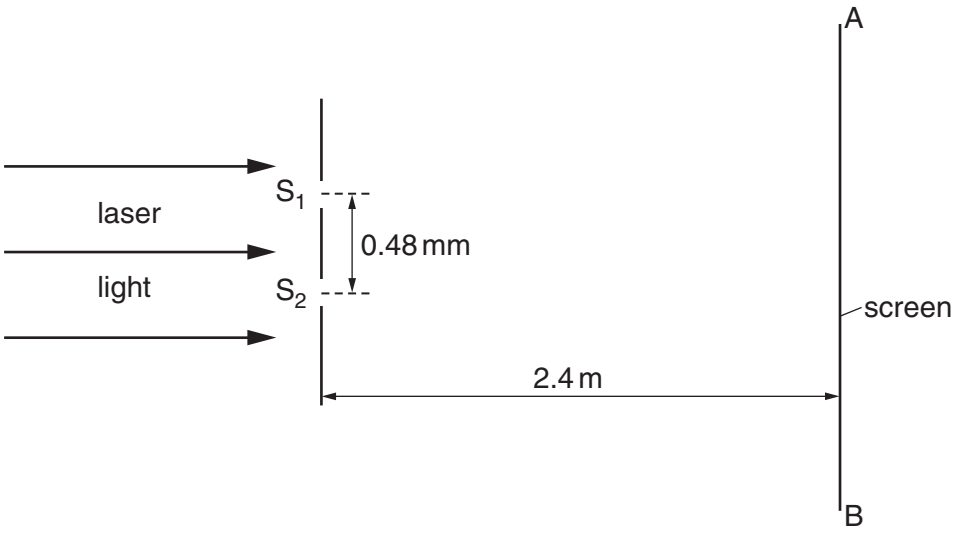

Fig. 6.1 (not to scale)

An interference pattern is observed on the screen AB. The separation of the slits is 0.48 mm. The slits are 2.4 m from AB. The distance on the screen across 16 fringes is 36 mm, as illustrated in Fig. 6.2.

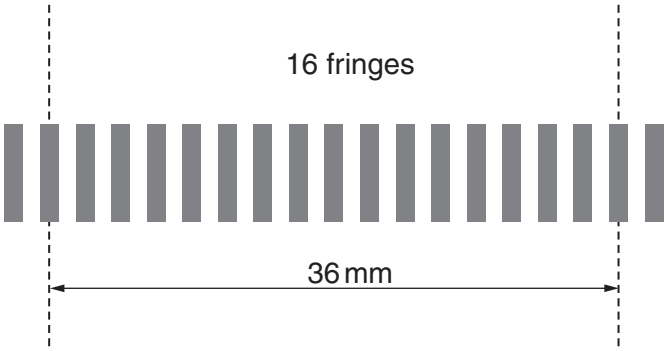

Fig. 6.2

Calculate the wavelength of the light emitted by the laser.

wavelength = ...m [3]

(c) Two dippers D_1 and D_2 are used to produce identical waves on the surface of water, as illustrated in Fig. 6.3.

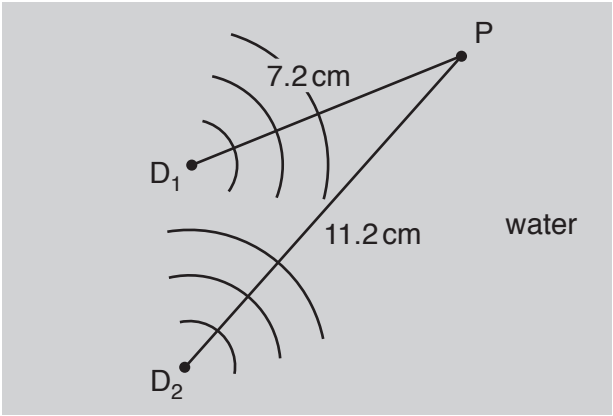

Fig. 6.3 (not to scale)

Point P is 7.2 cm from D_1 and 11.2 cm from D_2.

The wavelength of the waves is 1.6 cm. The phase difference between the waves produced at D_1 and D_2 is zero.

(i) State and explain what is observed at P.

.....

.....

.....[2]

(ii) State and explain the effect on the answer to **(c)(i)** if the apparatus is changed so that, separately,

1. the phase difference between the waves at D_1 and at D_2 is 180°,

.....

.....

.....

2. the intensity of the wave from D_1 is less than the intensity of that from D_2.

.....

.....

.....

[2]

[Total: 10]

© UCLES 2017

7 **(a)** Define *electromotive force* (e.m.f.) of a cell.

.....

.....[1]

(b) A cell C of e.m.f. 1.50 V and internal resistance 0.200 Ω is connected in series with resistors X and Y, as shown in Fig. 7.1.

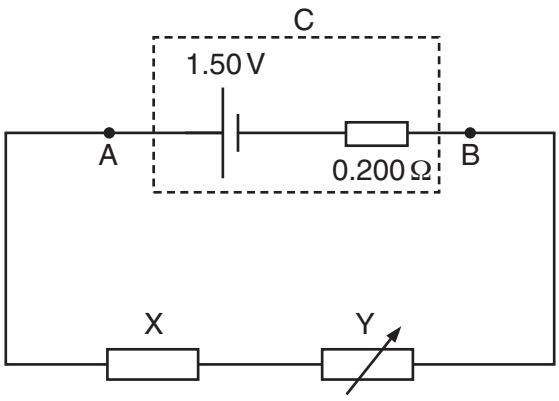

Fig. 7.1

The resistance of X is constant and the resistance of Y can be varied.

(i) The resistance of Y is varied from 0 to 8.00 Ω.

State and explain the variation in the potential difference (p.d.) between points A and B (terminal p.d. across C). Numerical values are not required.

.....

.....

.....

.....[3]

(ii) The resistance of Y is set at 6.00 Ω. The current in the circuit is 0.180 A.

Calculate

1. the resistance of X,

resistance = ...Ω [2]

2. the p.d. between points A and B,

p.d. = ... V [2]

3. the efficiency of the cell.

efficiency = ...[2]

[Total: 10]

8 **(a)** Describe **two** differences between the decay of a nucleus that emits a β^- particle and the decay of a nucleus that emits a β^+ particle.

1. .....

.....

2. .....

.....

[2]

(b) In a simple quark model there are three types of quark. State the composition of the proton and of the neutron in terms of these three quarks.

proton: .....

neutron: .....

[1]

[Total: 3]

Permission to reproduce items where third-party owned material protected by copyright is included has been sought and cleared where possible. Every reasonable effort has been made by the publisher (UCLES) to trace copyright holders, but if any items requiring clearance have unwittingly been included, the publisher will be pleased to make amends at the earliest possible opportunity.

To avoid the issue of disclosure of answer-related information to candidates, all copyright acknowledgements are reproduced online in the Cambridge International Examinations Copyright Acknowledgements Booklet. This is produced for each series of examinations and is freely available to download at www.cie.org.uk after the live examination series.

Cambridge International Examinations is part of the Cambridge Assessment Group. Cambridge Assessment is the brand name of University of Cambridge Local Examinations Syndicate (UCLES), which is itself a department of the University of Cambridge.

© UCLES 2017